THE TOOL COMPANY

Superline PRO® Black Edition Full Height Modular Floor Cabinet 600mm

OPERATOR INSTRUCTION MANUAL

Model No.

APMS31BE

Important: Please read these instructions carefully. Note the safe operational requirements, warnings & cautions. Use the product correctly and with care for the purpose for which it is intended. Failure to do so may cause damage and/or personal injury and will invalidate the warranty. Keep these instructions safe for future use.

© Jack Sealey Limited

Table of Contents

1.	**Introduction**	**2**
1.1	Intended Use	2
1.2	Description	2
2.	**Safety Symbols**	**3**
3.	**Safety**	**3**
4.	**Specification**	**3**
5.	**Contents**	**4**
6.	**Assembly**	**5**
7.	**Consumables & Accessories**	**7**
8.	**Maintenance**	**7**
9.	**Warranty**	**7**
10.	**Aftersales Support**	**7**

1. Introduction

Thank you for purchasing a Sealey product. Manufactured to a high standard, this product will, if used according to these instructions, and properly maintained, give you years of trouble free performance.

1.1 Intended Use

The Superline PRO® Black Edition Modular Full Height Floor Cabinet 600mm (APMS31BE) is designed for the secure storage and organisation of tools, equipment, parts, accessories, and workshop supplies in professional garages, workshops, and domestic work areas. The cabinet may be used as a standalone storage unit or integrated into a Superline PRO® Black Edition modular storage system. It features four adjustable shelves to accommodate items of varying sizes and a lockable door to help protect stored contents. The cabinet is intended for indoor use only in a clean, dry environment.

1.2 Description

Modular storage system ideal for any garage/ workshop. Durable construction that will last for years. Easily adjusts to specific needs. Purchase a simple base cabinet or create a full workshop storage system.

© Jack Sealey Limited

All content in this manual, including but not limited to text, images, graphics and logos is the property of Jack Sealey Ltd. or its licensors and is protected by copyright, trademark, and other intellectual property laws. You may not reproduce, distribute, modify, or otherwise use any content without prior written consent.

Disclaimer: All errors and omissions excluded. It is our policy to continually improve products and as such we reserve the right to alter data, specifications and component parts without prior notice. See **www.sealey.co.uk** for the latest information.

Country of origin: China.

2. Safety Symbols

Refer to instruction manual

Wear protective gloves

3. Safety

! **WARNING!** Ensure health & safety, local authority, and general workshop practice regulations are adhered to when using this storage system.

! **WARNING!** Use storage on level and solid ground, preferably concrete.

- Locate in a suitable work area.
- Keep the work area clean, uncluttered and ensure there is adequate lighting.
- Keep the storage system clean and tidy in accordance with good workshop practice.
- Keep children and unauthorised persons away from the work area.

⃠ **DO NOT** use the storage system for any purpose other than that for which it is designed.

⃠ **DO NOT** use the storage system outdoors.

⃠ **DO NOT** place the storage system in a damp or wet location or an area where there is condensation.

⃠ **DO NOT** clean the storage system with any solvents which may damage the surfaces or the protective coating.

⃠ **DO NOT** move the storage system when there are items placed inside.

⃠ **DO NOT** step on the shelves.

⃠ **DO NOT** overload the storage system.

4. Specification

Model No:	APMS31BE
Overall Size (W x D x H):	600 x 460 x 2000mm

© Jack Sealey Limited

5. Contents

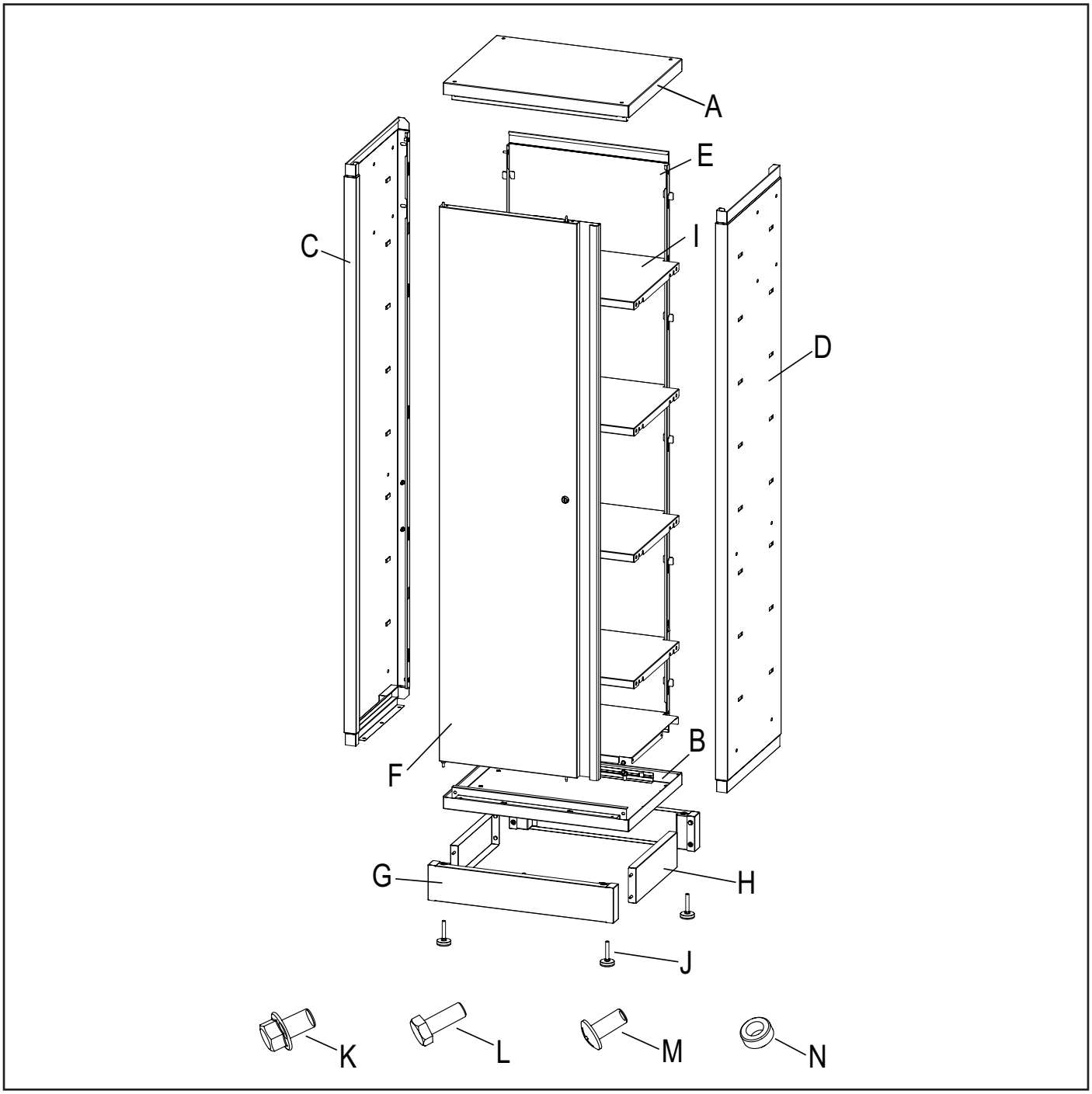

Item	Description	Qty
A	Top Panel	1
B	Bottom Panel	1
C	Left Side Panel	1
D	Right Side Panel	1
E	Back Panel	1
F	Door	1
G	Front Kick Panel	2
H	Side Kick Panel	2
I	Shelf Panel	4

Item	Description	Qty
J	Adjustable Feet	4
K	M10 x 16mm Bolt	4
L	M6 x 16mm Hex Bolt	16
M	M6 x 16mm Bolt	18
N	12 x 7 x 5mm Flat Washer	1

© Jack Sealey Limited

6. Assembly

Step.1

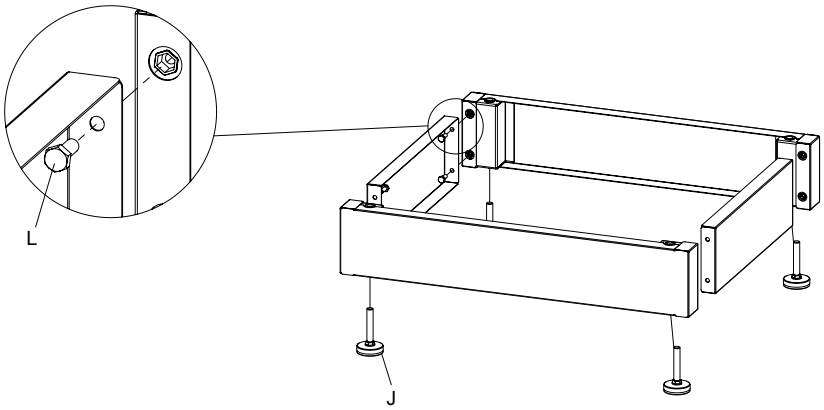

L: 8pcs

Step.2

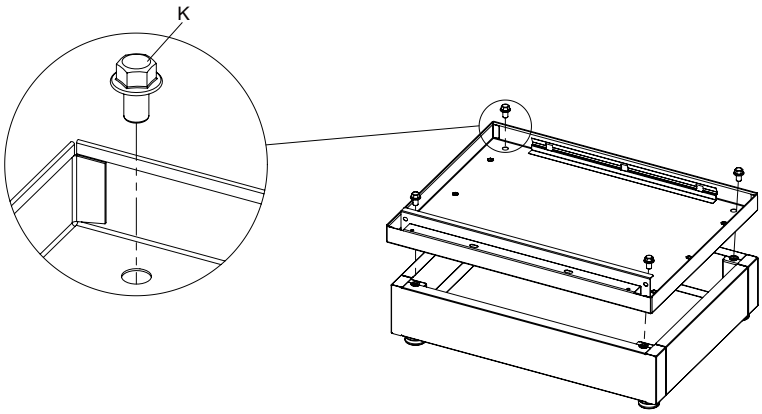

K: 4pcs

Step.3

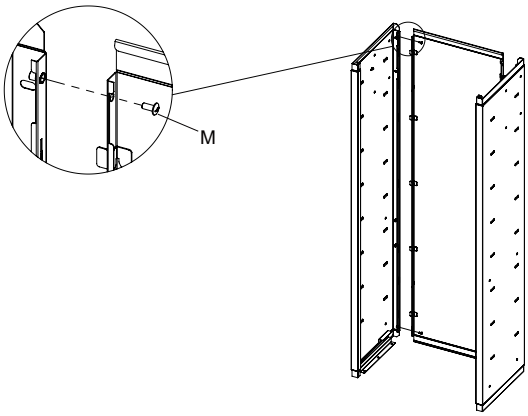

M: 4pcs

Step.4

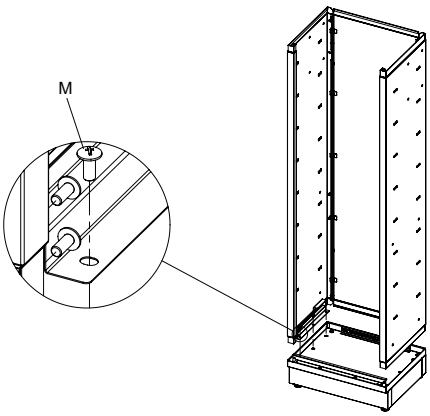

M: 10pcs

Step.5

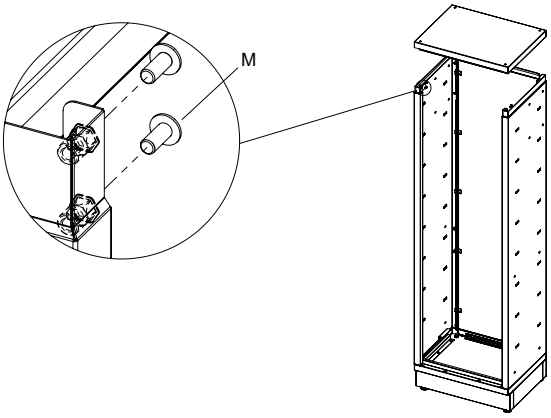

M: 4pcs

Step.6

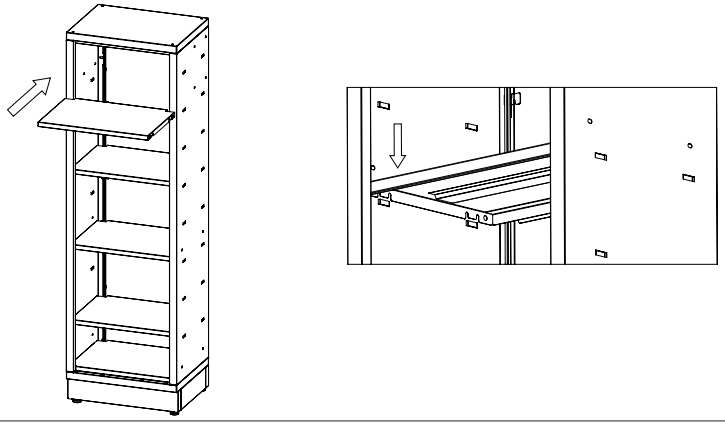

Step.7

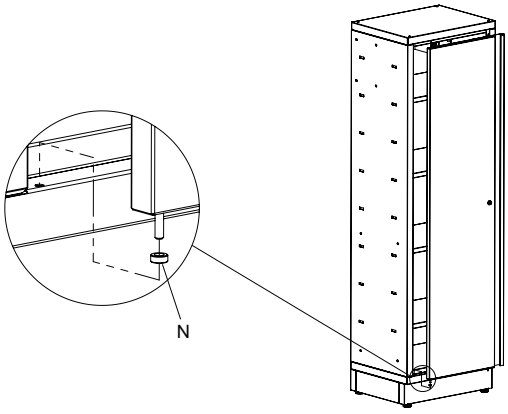

N: 1pc

7. Consumables & Accessories

A wide range of consumables and accessories are available.

Visit www.sealey.co.uk to explore our extensive range.

8. Maintenance

- Inspect the cabinet regularly to ensure all screws, hinges, shelf supports, and door hardware remain secure, tightening them as necessary. Clean the cabinet using a soft cloth and a mild detergent solution, then dry all surfaces thoroughly.

DO NOT use abrasive cleaners, solvents, or corrosive chemicals, as these may damage the finish.

- Keep the cabinet free from dust, dirt, oil, and other workshop contaminants, and periodically lubricate the hinges and lock mechanism with a light machine oil to maintain smooth operation. Ensure shelf loads are distributed evenly and do not exceed the intended capacity. If the cabinet forms part of a modular storage system, check all mounting and connecting fixings regularly. Store and use the cabinet in a clean, dry indoor environment and promptly repair any damaged finish to help prevent corrosion and extend the product's service life.

9. Warranty

- Guarantee is 60 months from purchase date, proof of which is required for any claim.

Please note that guarantee claims must be made via the place of purchase where you may need to provide proof of purchase. All consumable items are under no warranty period. All warranties exclude general wear and tear and misuse, see our terms of business for more details.

10. Aftersales Support

We are committed to supporting our products throughout their lifetime.

- If your product is outside of the warranty period, we offer an extensive range of spare parts along with expert technical advice to help keep your equipment in working order.
- Our technical team is on hand to assist 8.30am-5.00pm Mon-Fri with fault finding, repairs and general product queries.

  Telephone 01284 757505

  Email: technical@sealey.co.uk

If required, products can also be returned to Sealey or one of our authorised repair agents for inspection, servicing or repair at a reasonable cost.

Product Registration

It's quick and easy to register your warranty online at www.sealey.co.uk. Just log in or create a free MySealey account, then head to the 'My Products' section to fill out the short warranty registration form. If your product is advertised with a free extended warranty upon registration, this will activate your extended warranty.

Environment Protection

Recycle unwanted materials instead of disposing of them as waste. All tools, accessories and packaging should be sorted, taken to a recycling centre and disposed of in a manner which is compatible with the environment. When the product becomes completely unserviceable and requires disposal, drain any fluids (if applicable) into approved containers and dispose of the product and fluids according to local regulations.

Jack Sealey (EU) Ltd t/a Sealey Group Farney Street, Carrickmacross, Co. Monaghan, A81 PK68 Ireland
Jack Sealey Ltd t/a Sealey Group Kempson Way, Suffolk Business Park, Bury St Edmunds, Suffolk, IP32 7AR UK
Tel: 01284 757500 ▪ **Email:** sales@sealey.co.uk ▪ **Web:** www.sealey.co.uk

© Jack Sealey Limited